Tested, proven Delphi ignition coils. Superior performance and efficiency.

Help ensure fast starts, consistent engine performance and optimized fuel efficiency with Delphi ignition coils. Delphi makes more than 10 million ignition coils for North America each year, and each one is engineered to OE design specifications for vehicles from Ford, Toyota, Nissan, Lexus, GM, Mazda, Subaru, Acura and more.

The brand you can depend on

We researched why other coils fail. Then built ours to last.

Delphi has analyzed the tough environment that ignition coils must withstand and discovered how vibration, temperature changes and even the failure of other components, such as spark plugs, can cause ignition coils to fail.

Specifically, these stresses can cause ignition coil wiring to break or have shorts. The insulation inside the ignition coil could also fail and cause energy to escape. Delphi is combatting these issues with an innovative design and high quality materials.

Designed with the Delphi difference

- Delphi ignition coils are designed — and endurance tested — to resist the common stresses that cause failure.
- We've used our 100 years of OE ignition system experience to create world-leading magnetic design and modeling capabilities.
- The result is an efficient coil design that ensures the power in the coil has a streamlined path to the spark plug.
- This design also reduces the occurrence of shorts inside the ignition coil.

Another plus: our precision manufacturing processes

We back up our innovative ignition coil design with intelligent manufacturing. Delphi uses winding process techniques to control the length of wire between adjacent windings. That's important because more length results in greater voltage differences, which in turn create more pressure that could break down the insulation and wire coating.

More welds. More consistency.

Delphi ignition coils feature 6 weld positions, which is typically more than other brands. We also use an electrostatic paint coating, which results in consistent coil inductance and prevents lamination separation.

Greater insulating power

We also use an epoxy vacuum technique to reduce air bubbles in the epoxy, since having fewer air bubbles increases the epoxy's insulation quality and reduces the chances of energy punch-through failures.

Made with high quality materials

Delphi backs its proven ignition coil design with proven materials: High quality wires, as well as high quality wire coating that resists the cracks, pin holes and imperfections that most often lead to failure issues.

Ignition pencil coils

The pencil coil design is not just for Indy and Formula One engines. Also known as "coil on plug," Delphi pencil coils replace traditional multiple packs with one single coil design. Pencil coils were developed so the spark and spark timing could be better controlled on an individual cylinder basis.

Built by the company that makes the parts cars are born with, Delphi pencil coils are designed with the newest ignition coil OE technology. Our pencil coils deliver total control with no moving parts and high-RPM capability for performance and reliability customers can trust.

Pencil coils for precision and control

[A] Smaller compact design results in fewer materials and tighter coupling to the electromagnetic circuit. It's a design that delivers energy more efficiently and continuously to enhance engine performance and optimize fuel efficiency.

[B] Delphi pencil coils are housed in a **corona-resistant case**, so the coil and integral igniter module are fully encapsulated into one package.

[C] More Precise Spark Timing Response for increased engine performance.

[D] Direct placement on the spark plug gives the spark a shorter distance to reach the spark plug; also the coil placement provides a perfect fit in the plug hole for effective sealing.

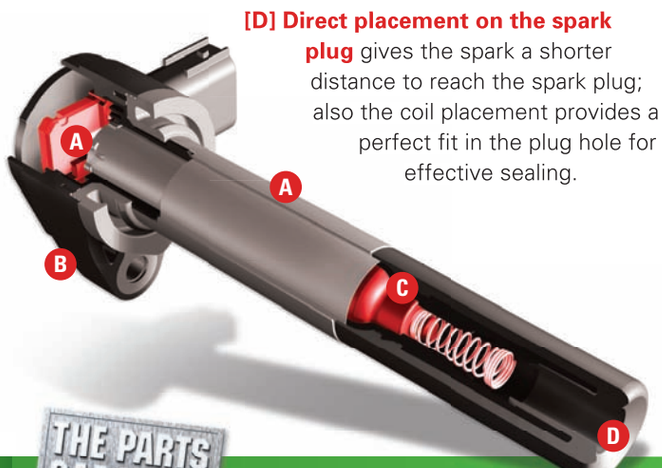

THE PARTS CARS ARE BORN WITH

Delphi aces the OE test

- **Six Delphi pencil coils successfully passed a standard 230-hour thermal cycle test, while three competitor coils failed within the first two hours.**
- **Two competitor brand coils had melted material, and one coil did not fire.**
- **Those brands showed signs of stress, including degraded plastic that was not strong enough to hold the spark inside the coil. The result was misfire and charred plastic.**

Stock the ignition coils you can rely on in your shop.